OekoUniversal Typ 450/500
OekoUniversal type 450/500
OekoUniversal type 450/500
OekoUniversal modelo 450/500

Art.-Nr.
200.1672.xx

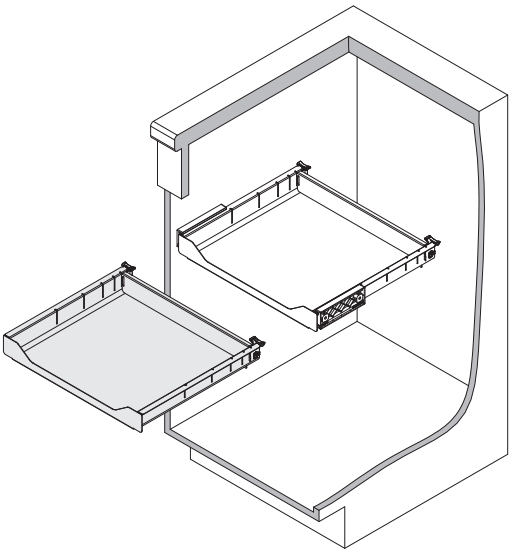

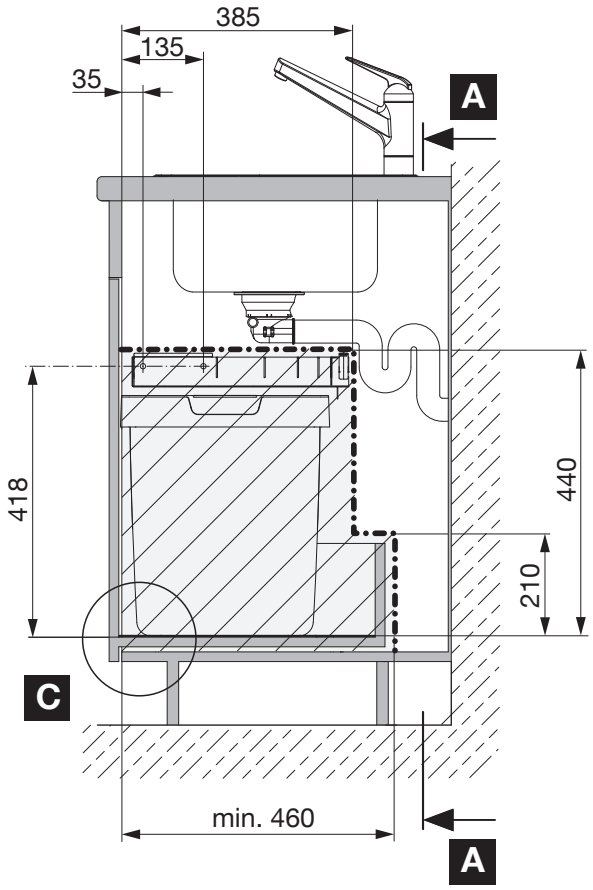

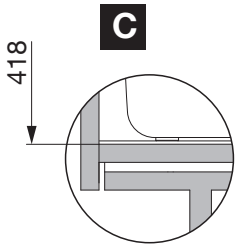

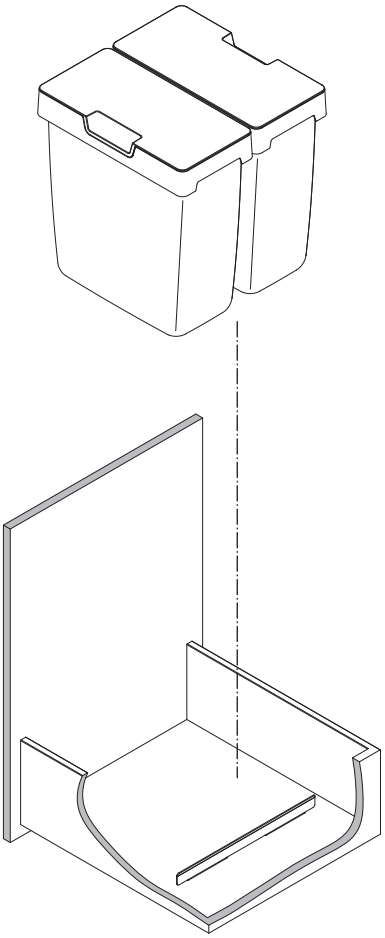

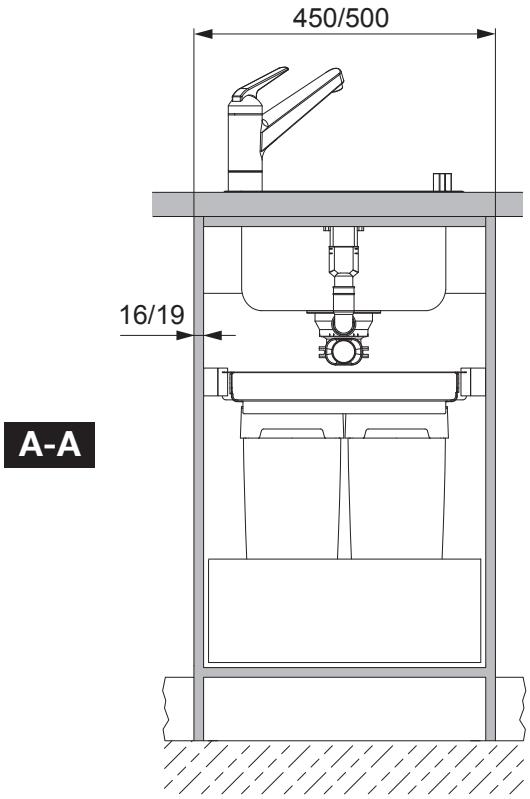

peka
T +41 41 919 94 00
F +41 41 919 94 10
www.peka-system.ch
peka@peka-system.ch